NOTICE:		
RoHS ✓	ALL PARTS MUST MEET TO RoHS REQUIREMENTS	CUSTOMER OUTLINE DRAWING

REV.	DESCRIPTION	ECN NO.	NAME	DATE
A0	FIRST EDITION	N/A	XU	2025/07/28

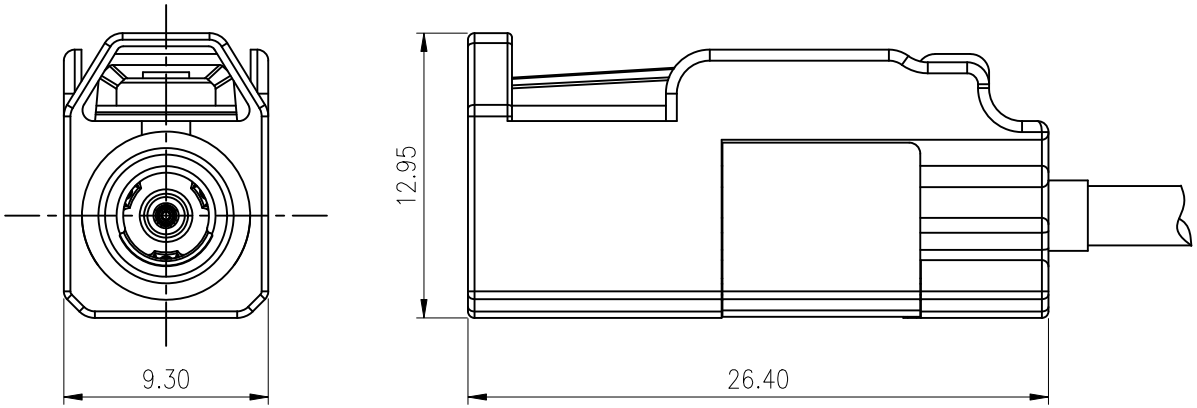

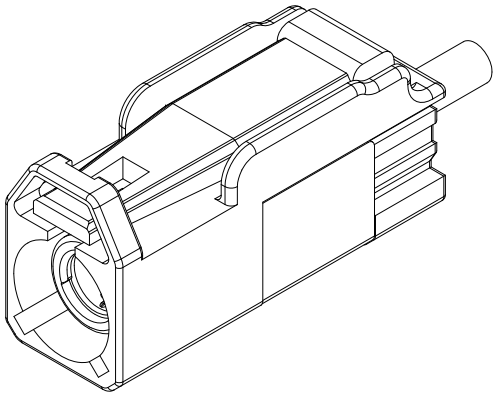

NOTES:
1. Material and plating: SEE TABLE
2. Electrical data:
   2.1. Impedance: 50 Ω
   2.2. Frequency: DC to 6 GHz
   2.3. Return loss: ⩾15.56 dB (DC to 2 GHz)
   ⩾13.98 dB (2 to 3 GHz)
   ⩾12.74 dB (3 to 6 GHz)
   2.4. Insertion loss: ⩽ 0.1 x f(GHz) dB
   2.5. Insulation resistance: 1000 MΩ MIN.
   2.6. Center contact resistance: 5 mΩ MAX
   2.7. Outer contact resistance: 5 mΩ MAX
   2.8. Test voltage: 750 V rms
   2.9. Working voltage: 60 V rms
   2.9. Power current: ⩽ 1 A DC
3. Mechanical data:
   3.1 Mating cycles: ⩾25
   3.2 Engagement force: ⩽25 N
   3.3 Retention force plastic housing: ⩾ 110 N
   3.4 Coding efficiency: ⩾ 40 N
4. Environmental data
   4.1 Temperature range: −40°C TO +105°C

TABLE:

ITEM	PART NAME	MATERIAL	PLATING/COLOR	Q'TY
5	Crimping ferrule	COPPER ALLOY	TIN	1
4	Outer contact	COPPER ALLOY	TIN	1
3	Dielectric	PBT	WHITE	1
2	Center contact	COPPER ALLOY	GOLD/TIN	1
1	Housing	PBT	SEE SHEET 2	1

SIGNAL® RF

APPROVED:	CUSTOMER P/N:
CHECKED:	REV. : A0
CHECKED:	SCALE: 3:1
DRAWING:	DATE: 2025-07-28

TITLE: FAKRA FEMALE FOR RG174、RTK031、RG58 CONNECTOR

DRAWING NO.

ORDER NO. 805020-00-026~028

THIRD ANGLE PROJECTION

TOLERANCES ARE:

DECIMALES	ANGLES
.x ±0.5	x.° ±5.0°
.xx ±0.3	.x° ±3.0°

UNITS: mm

SHEET: 1 OF 1

SIZE: A4

NOTICE:	ALL PARTS MUST MEET TO RoHS REQUIREMENTS	CUSTOMER OUTLINE DRAWING
RoHS ✓		

REV.	DESCRIPTION	ECN NO.	NAME	DATE
A0	FIRST EDITION	N/A	XU	2023/08/23

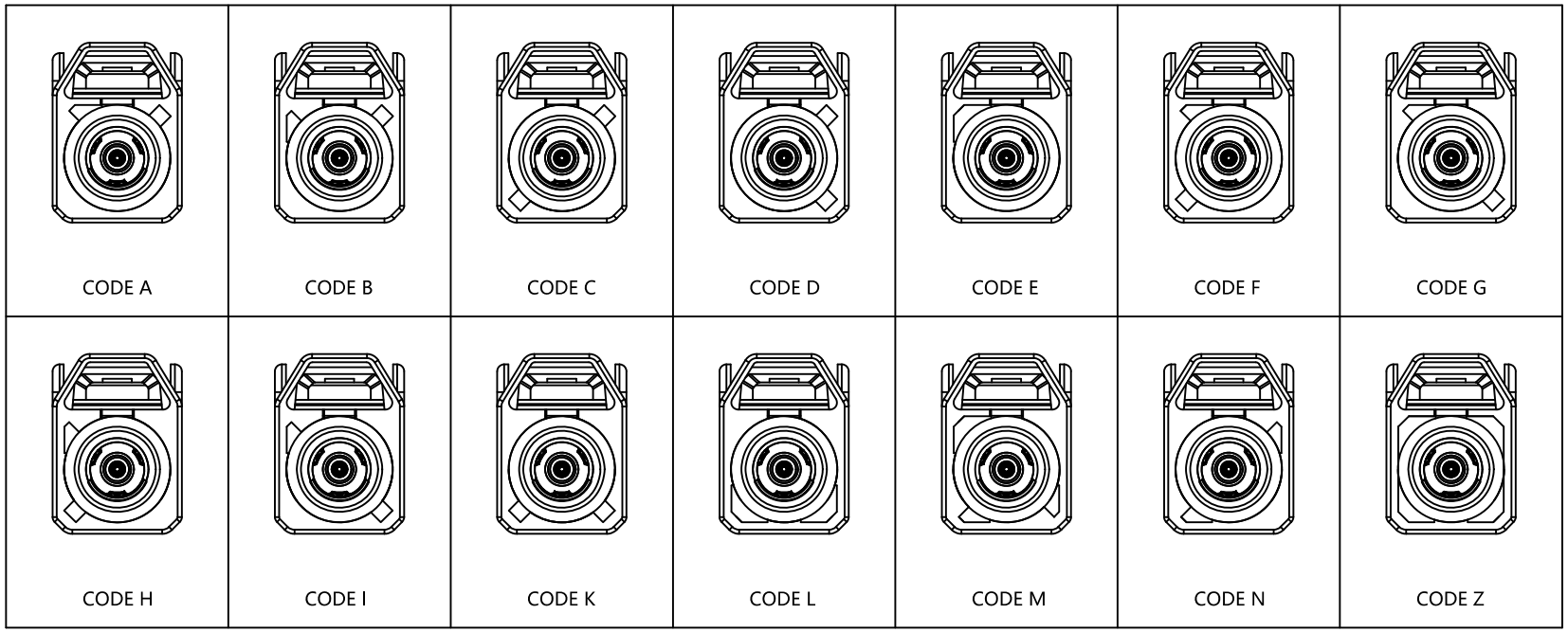

RG174/Dacar462 CABLE:

CODING	COLOR	RAL	ORDER NO.
Z	Waterblue	sim. 5021	805020-00-026-Z
N	Pastel green	sim. 6019	805020-00-026-N
M	Pastel orange	sim. 2003	805020-00-026-M
L	Carmine red	sim. 3002	805020-00-026-L
K	Curry	sim. 1027	805020-00-026-K
I	Beige	sim. 1001	805020-00-026-I
H	Violet	sim. 4003	805020-00-026-H
G	Grey	sim. 7031	805020-00-026-G
F	Brown	sim. 8011	805020-00-026-F
E	Green	sim. 6002	805020-00-026-E
D	Bordeauxviolet	sim. 4004	805020-00-026-D
C	Blue	sim. 5005	805020-00-026-C
B	White	sim. 9001	805020-00-026-B
A	Black	sim. 9005	805020-00-026-A

SIGNAL® RF

APPROVED:	CUSTOMER P/N:
CHECKED:	REV. : A0
CHECKED:	SCALE: 3:1
DRAWING:	DATE: 2025-07-28

TITLE: FAKRA FEMALE FOR RG174/Dacar462 CONNECTOR

DRAWING NO.

ORDER NO. SEE TABLE

THIRD ANGLE PROJECTION

TOLERANCES ARE:

DECIMALES	ANGLES
.x ±0.5	x.° ±5.0°
.xx ±0.3	.x° ±3.0°

UNITS: mm

SHEET: 1 OF 1

SIZE: A4

NOTICE:	ALL PARTS MUST MEET TO RoHS REQUIREMENTS	CUSTOMER OUTLINE DRAWING
RoHS ✓		

REV.	DESCRIPTION	ECN NO.	NAME	DATE
A0	FIRST EDITION	N/A	XU	2023/08/23

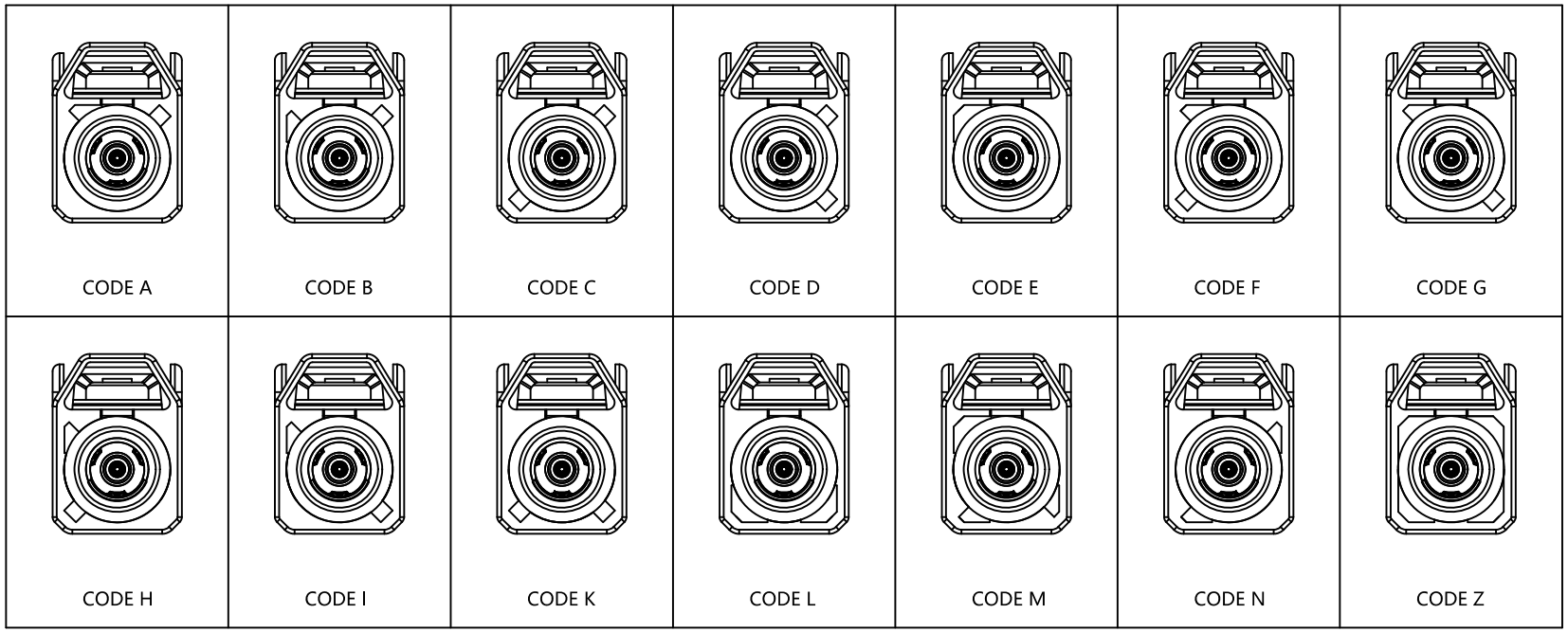

RTK031/Dacar302 CABLE:

CODING	COLOR	RAL	ORDER NO.
Z	Waterblue	sim. 5021	805020-00-027-Z
N	Pastel green	sim. 6019	805020-00-027-N
M	Pastel orange	sim. 2003	805020-00-027-M
L	Carmine red	sim. 3002	805020-00-027-L
K	Curry	sim. 1027	805020-00-027-K
I	Beige	sim. 1001	805020-00-027-I
H	Violet	sim. 4003	805020-00-027-H
G	Grey	sim. 7031	805020-00-027-G
F	Brown	sim. 8011	805020-00-027-F
E	Green	sim. 6002	805020-00-027-E
D	Bordeauxviolet	sim. 4004	805020-00-027-D
C	Blue	sim. 5005	805020-00-027-C
B	White	sim. 9001	805020-00-027-B
A	Black	sim. 9005	805020-00-027-A

SIGNAL® RF

APPROVED:	CUSTOMER P/N:
CHECKED:	REV. : A0
CHECKED:	SCALE: 3:1
DRAWING:	DATE: 2025-07-28

TITLE: FAKRA FEMALE FOR RTK031/Dacar302 CONNECTOR

DRAWING NO.

ORDER NO. SEE TABLE

THIRD ANGLE PROJECTION

TOLERANCES ARE:

DECIMALES	ANGLES
.x ±0.5	x.° ±5.0°
.xx ±0.3	.x° ±3.0°

UNITS: mm

SHEET: 1 OF 1

SIZE: A4

NOTICE:		
RoHS ✓	ALL PARTS MUST MEET TO RoHS REQUIREMENTS	CUSTOMER OUTLINE DRAWING

REV.	DESCRIPTION	ECN NO.	NAME	DATE
A0	FIRST EDITION	N/A	XU	2023/08/23

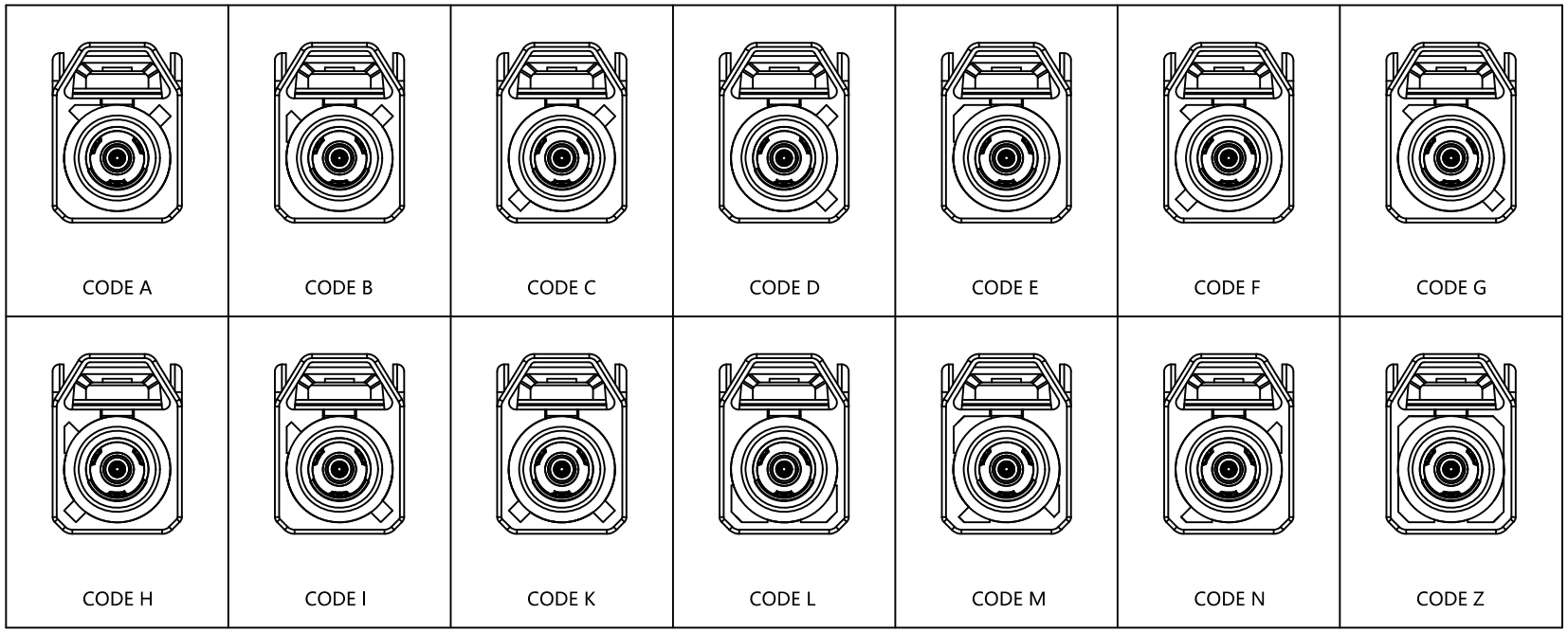

RG58 CABLE:

CODING	COLOR	RAL	ORDER NO.
Z	Waterblue	sim. 5021	805020-00-028-Z
N	Pastel green	sim. 6019	805020-00-028-N
M	Pastel orange	sim. 2003	805020-00-028-M
L	Carmine red	sim. 3002	805020-00-028-L
K	Curry	sim. 1027	805020-00-028-K
I	Beige	sim. 1001	805020-00-028-I
H	Violet	sim. 4003	805020-00-028-H
G	Grey	sim. 7031	805020-00-028-G
F	Brown	sim. 8011	805020-00-028-F
E	Green	sim. 6002	805020-00-028-E
D	Bordeauxviolet	sim. 4004	805020-00-028-D
C	Blue	sim. 5005	805020-00-028-C
B	White	sim. 9001	805020-00-028-B
A	Black	sim. 9005	805020-00-028-A

SIGNAL® RF

APPROVED:	CUSTOMER P/N:
CHECKED:	REV. : A0
CHECKED:	SCALE: 3:1
DRAWING:	DATE: 2025-07-28

TITLE: FAKRA FEMALE FOR RG58 CONNECTOR

DRAWING NO.

ORDER NO. SEE TABLE

THIRD ANGLE PROJECTION

TOLERANCES ARE:

DECIMALES	ANGLES
.x ±0.5	x.° ±5.0°
.xx ±0.3	.x° ±3.0°

UNITS: mm

SHEET: 1 OF 1

SIZE: A4